PV-DC-Junction box

CiPlug2-MCx1.MCx1-DP6VG-1-XS

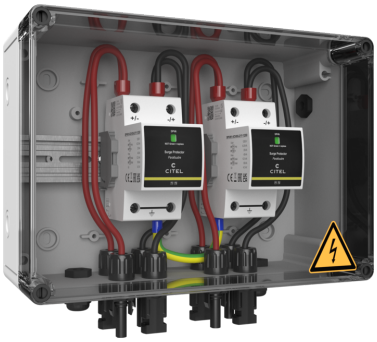

- Junction box for 2 MPP-Tracker / 1 String
- Surge protection integrated (DPVN1-6CVG-21Y-1200, Type 1+2+3)
- Protection rating IP65
- Connection cables pre-assembled with MC4 connectors

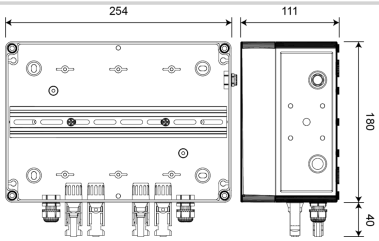

Jeweils pro MPP-Tracker

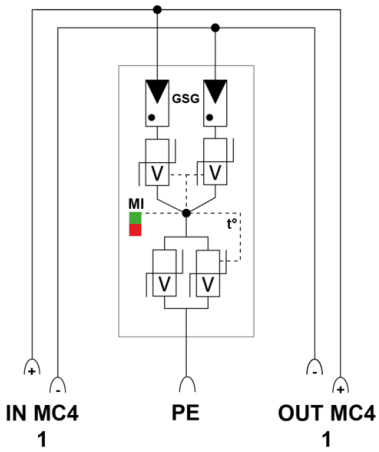

Electrical Characteristics		
SPD type	IEC	1+2+3
Network		PV network 1000 Vdc
Nominal DC voltage	Un-dc	1000 Vdc
Rated insulation voltage *Ui*	Ui	1000 Vdc
Rated current *InA*	InA	30 A
Rated string current	InC	30 A
Mechanical Characteristics		
Housing material		UV and ozone resistant, glass fibre reinforced polycarbonate
Dimensions		See diagram
Input / per MPPT		MC4 plug (attached to the housing base)
Output / per MPPT		MC4 plug (attached to the housing base)
Ground connection terminal		Screw terminal 2.5-25mm² (35mm²)
Cable gland		Metric / 1x M24 (Ø 6-12mm) PE
Housing material		UV and ozone resistant, fiberglass reinforced polycarbonate with semi-transparent cover
Dimensions		WxHxD (mm): 254 x 180 x 111
Ambient temperatures		Indoor: -5°C to max. +40°C (+35°C 24h average) / Outdoor: -25°C to max. +40°C (+35°C 24h average)
Humidity		Indoor: max. 50% at +40°C, max. 90% at 20°C (non-condensing) / Outdoor: 95% for a short time at +25°C (non-condensing)
Protection rating		IP 65
Protection class		Class II
Impact resistance		IK 8
Pressure compensation element		Existing
Standards		
Standards compliance		DIN EN 50539-11 / DIN EN IEC 61439-2
Part number		
156625		